INDRO ROBOTICS



GO1 EDU

The Maneuverable Quadruped

InDro Robotics distributes Unitree's GO1 EDU, a small, yet capable, quadruped robot. This is a cost effective machine for research entities to begin quadruped development. Impressive internal hardware, including cameras, sensors and 3 Jetson Nanos, gives developers remarkably powerful autonomy potential.

INDRO ROBOTICS

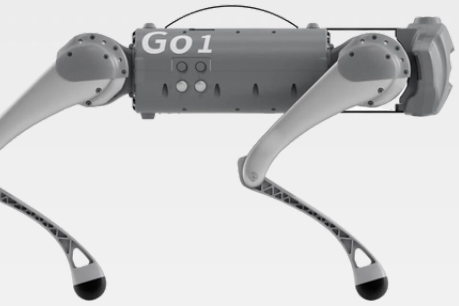

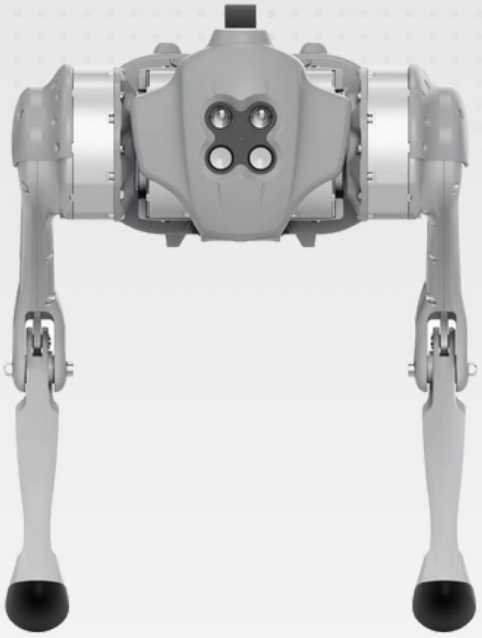

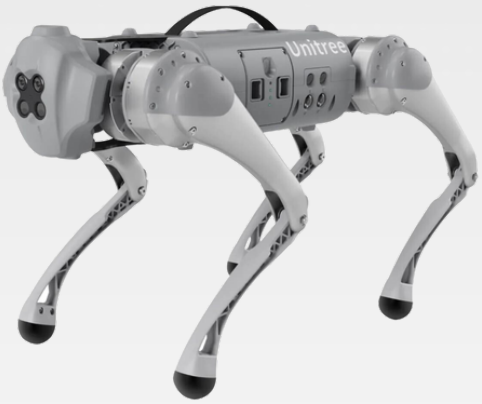

CAMERAS
5 Sets of Fish-Eye Cameras

FOLLOW
Pre-installed 'Side Follow' Mode

SENSORS
4 Pressure Sensors (1 per foot)
3 Sets of Ultrasonic Sensors

FUNCTIONS
11 Pre-installed Commands
Walk, Run, Climb & Dance

PORTS
USB, HDMI, Ethernet & More

CONNECT
Internal Wifi Connectivity

SPECIFICATIONS

LENGTH	588mm
HEIGHT	290mm
WIDTH	220mm
CLEARANCE	250mm
WEIGHT	12kg
LOAD	5kg
SPEED	17km/h
BATTERY	24V6Ah

UPGRADES

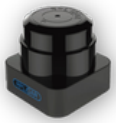

2D LiDAR



3D LiDAR

By adding a 2D or 3D LiDAR, we upgrade one NVIDIA Jetson Nano to a NVIDIA Jetson Xavier NX. This enables:

- Obstacle Avoidance
- Navigation Planning
- Map Building
- VSLAM
- Self-Positioning
- Gesture Recognition
- Deep Learning
- Machine Vision

APPLICATIONS

Computer Vision
Obstacle categorization & intelligent data outputs.

Full Autonomy
Autonomous navigation & obstacle avoidance.

Commercial Use
Delivery, inspection & other real-world applications.

INDRO ROBOTICS

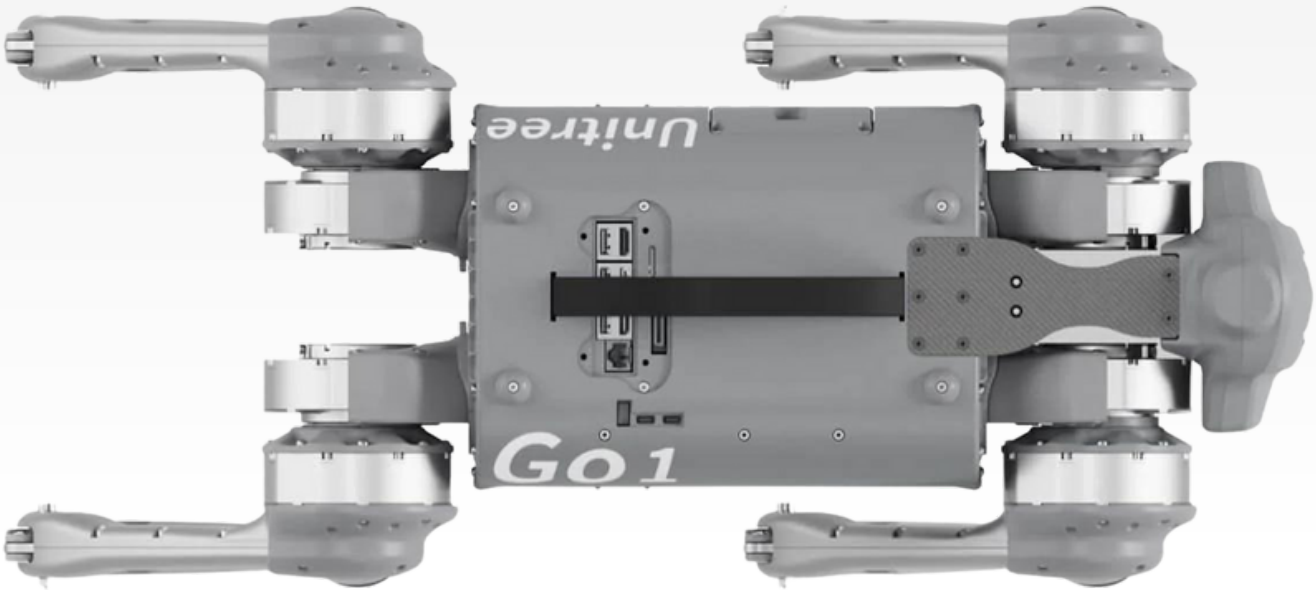

sales@indrorobotics.com
1-844-464-6376

www.indrorobotics.com